Print on A4 size (210mm x 297mm)

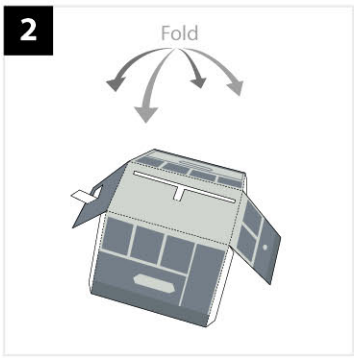

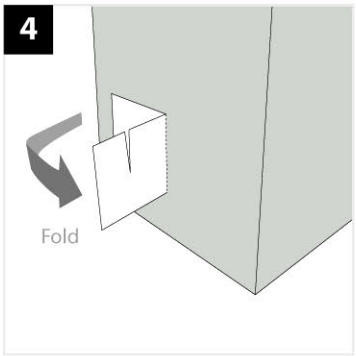

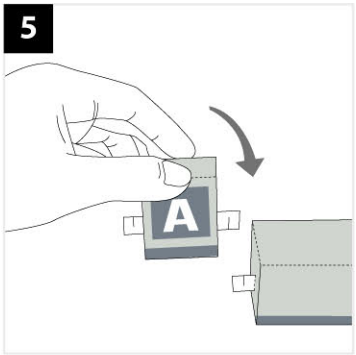

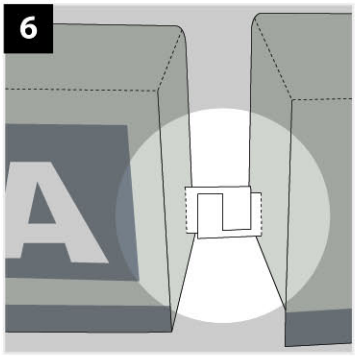

Child Mirror®
Animation WorkShop

Train of ALPHABET

20-1-2007

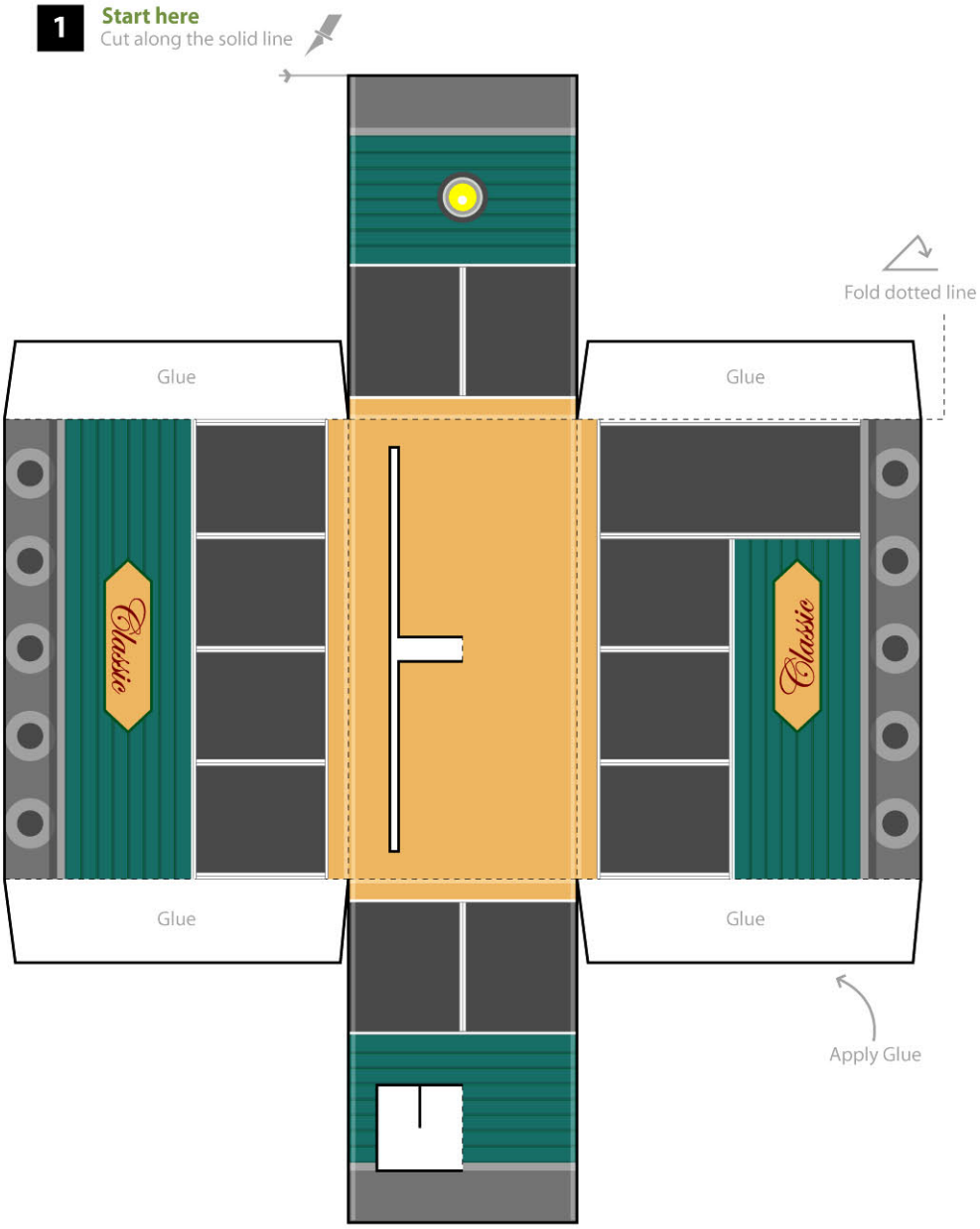

Caution : Always cut with a sharp knife to avoid damage to your Train of Alphabet and for children please ask assistance from your parents.